SpanSet®

Betriebsanleitung Zurren

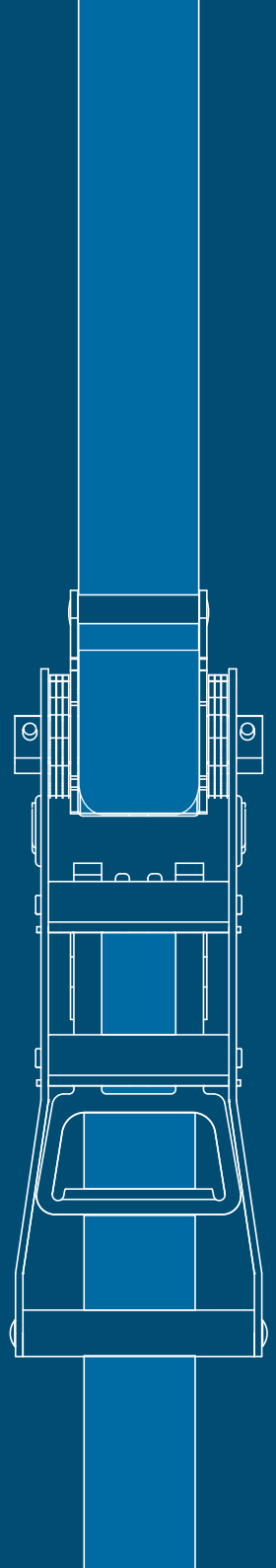

SpanSet
Certified
Safety

Evers
... sichert Produktwerte

EN

Operating Instructions for Lashing Straps according to DIN EN 12195-2

Evers GmbH · Graf-Zeppelin-Str. 10 · 46149 Oberhausen · Telefon +49 208 99475-0 · Telefax +49 208 99475-31 · evers@e versgmbh.de · eversgmbh.de

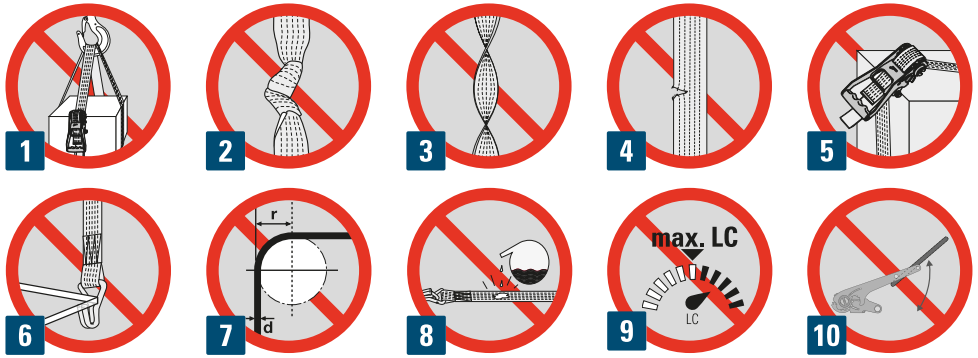

I

II

III

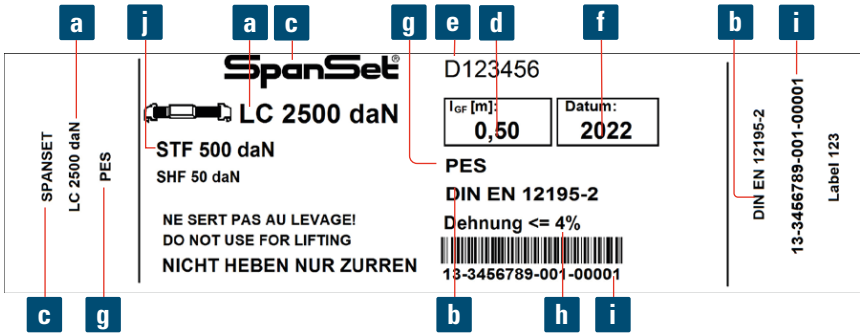

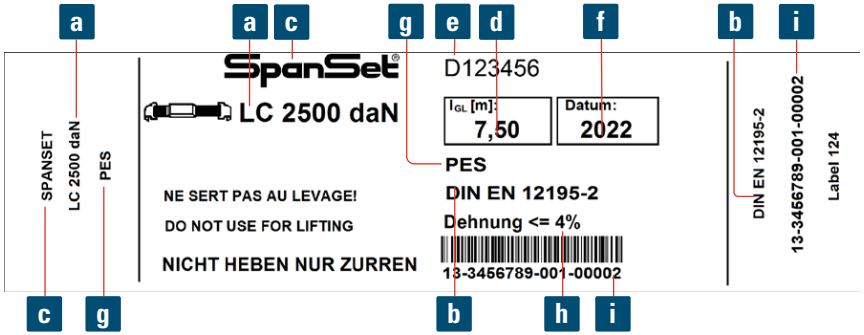

IV

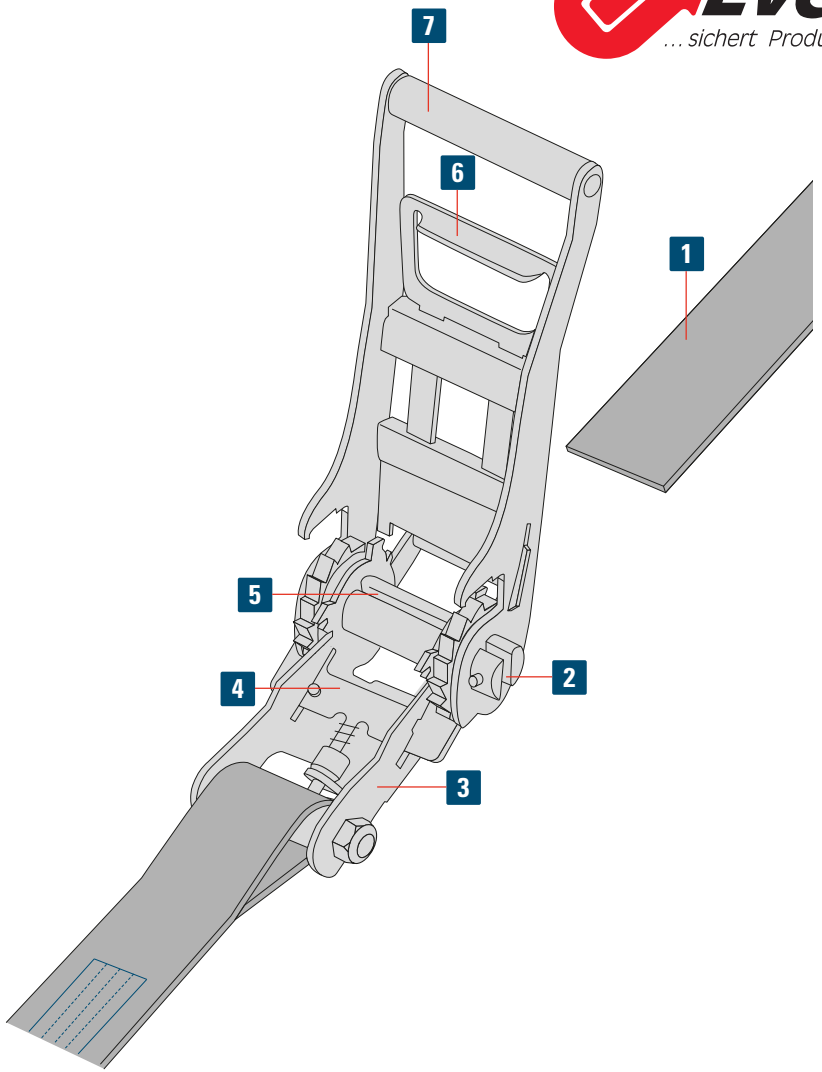

V

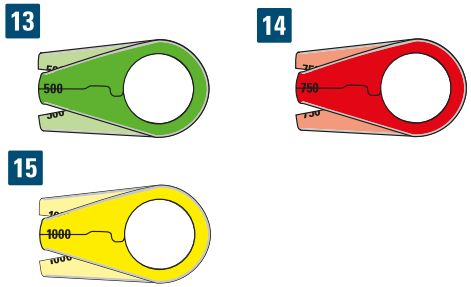

VI

▲Inbetriebnahme / ●nächste Prüfung

2022	2023	2024
1 2 3 4 5	1 2 3 4 5	1 2 3 4 5
6 7 8 9	6 7 8 9	6 7 8 9
10 11 12	10 11 12	10 11 12

VII

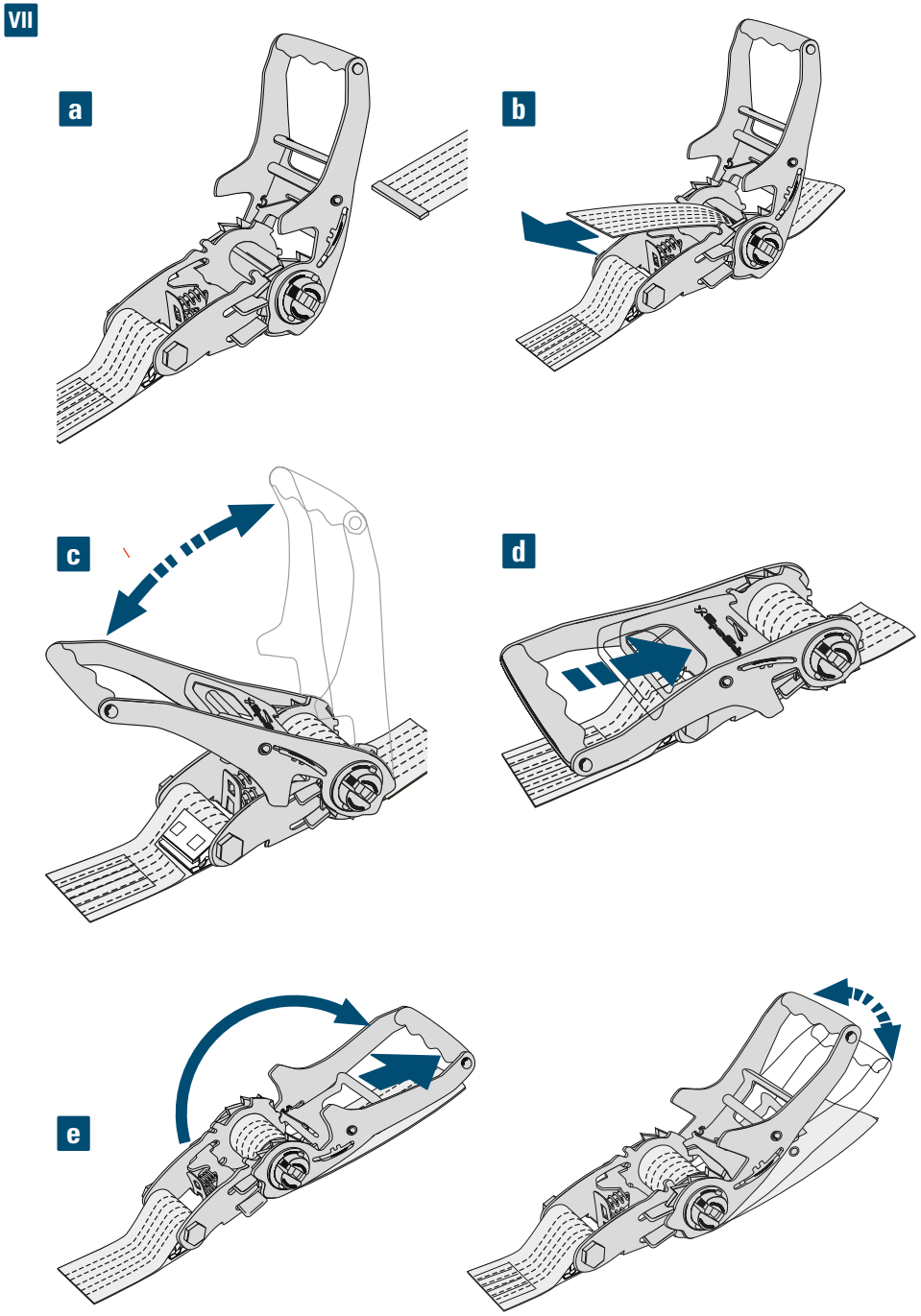

VIII

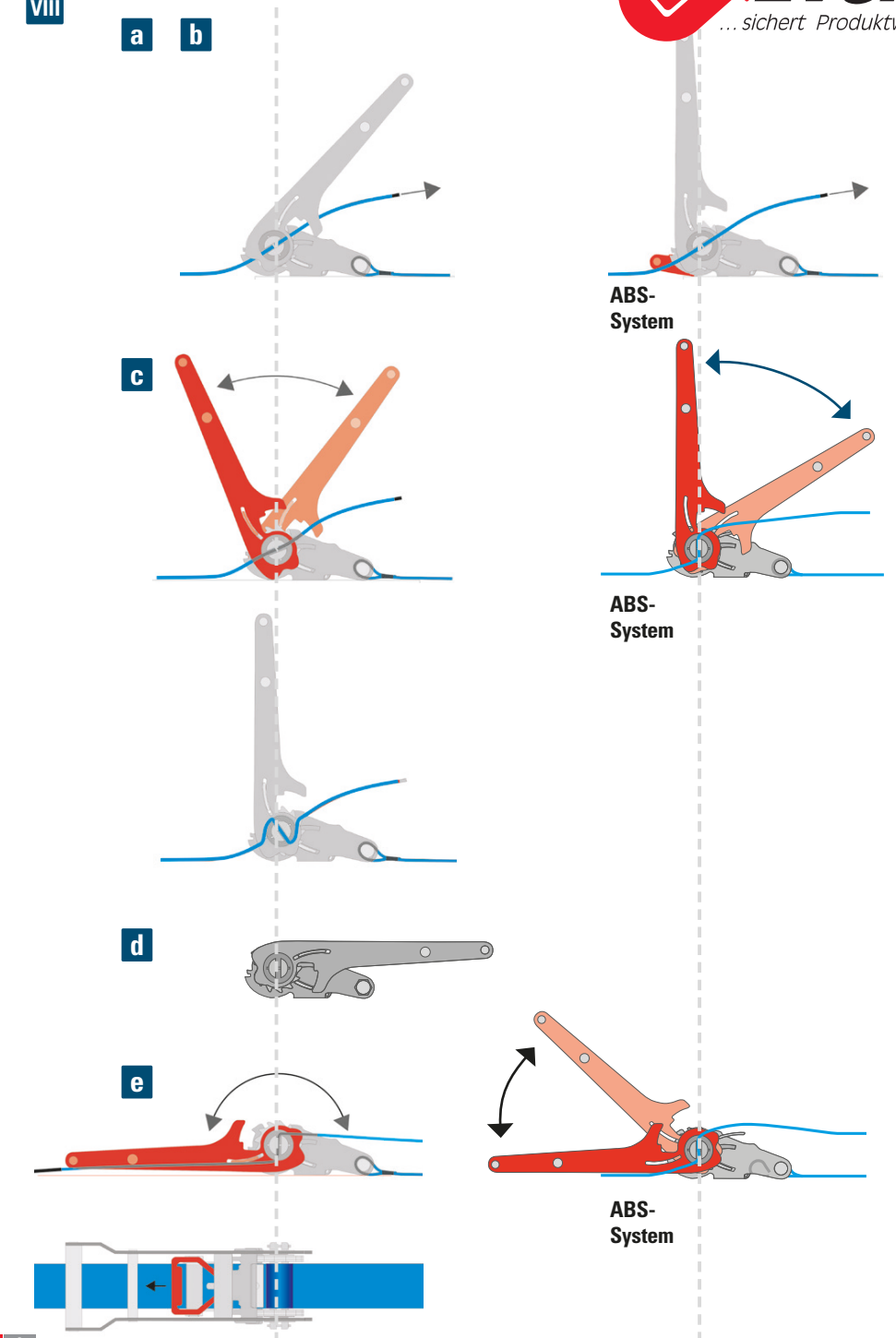

Table of Contents

1. Notes on these instructions

1.1 Aim

This manual contains information for the safe use of the SpanSet lashing strap. It must therefore

– be read carefully and in full before first use
– observed during use
– be kept within easy reach of the product

⚠ Failure to observe the safety and handling instructions may result in personal injury and material damage!

1.2 Target group

This manual is intended for qualified persons. Qualified persons may operate the SpanSet lashing strap and carry out visual inspections regarding its suitability for use.

1.3 Format conventions

EN Language code: English

Obligatory reading: Please observe warnings and safety instructions

⚠ Warning: Special care and attention required

Prohibition sign

Handling information

Evers GmbH · Graf-Zeppelin-Str. 10 · 46149 Oberhausen · Telefon +49 208 99475-0 · Telefax +49 208 99475-31 · evers@eversgmbh.de · eversgmbh.de

1.4 Availability

These instructions are to be kept for the entire service life and transferred to any new owners/ operators with the corresponding **SpanSet lashing strap**.

2. Product description

2.1 Design

SpanSet lashing **one part strap** (A), **force-amplified** (B) or **two part strap** (C).

A)

B)

C)

2.2 System Design IV

The SpanSet lashing strap is a textile-based lashing strap based on DIN EN 12195-2.

1. The clamping element, itself consisting of the console **3** with the central slotted shaft **2** and the ratchet lever **7**;
2. 2. The lashing belt **1** and
3. 3. The connection elements: Carabiner hook or triangle hook.

2.3 Labelling

Each SpanSet lashing strap is clearly marked by a stitched blue label **III** (see envelope (shown here in white)) and accompanying documents. The label allows any SpanSet lashing strap to be identified.

d. Lashing capacity LC
e. Applicable standard
f. Manufacturer / distributor
g. Lashing length (m)
h. Item number
i. Date of manufacture (year)

Evers GmbH · Graf-Zeppelin-Str. 10 · 46149 Oberhausen · Telefon +49 208 99475-0 · Telefax +49 208 99475-31 · evers@eversgmbh.de · eversgmbh.de

j. Material abbreviation
k. Expansion (under permissible lashing force)
l. Traceability code

3. Safety regulations

3.1 Warning labels

⚠ DANGER Indicates an imminently hazardous situation which, if not avoided, will result in death or serious injury.

⚠ CAUTION Indicates a potentially hazardous situation which, if not avoided, could result in minor or slight injury.

3.2 General safety instructions

When handling the SpanSet lashing strap, please note the following:

– There should be between 1.5 and 3 strap layers (wraps) on the slotted shaft of the ratchet SpanSet ashing straps with ABS-system between 2 and max. 3 strap layers (wraps).
– Only use the same lashing equipment (SpanSet lashing strap) to secure the load.
– Hooks may only be attached at the hook beds.
– If possible, use anti-slips mat to increase the coefficient of sliding friction.
– All lashing points must be able to absorb the resultant forces.
– The ratchet must be exposed when lashing.
– Always use an edge guard for sharp-edged or rough cargo.
– Engage the ratchet lever completely, otherwise the lashing strap may lose its entire clamping force.
– Ratchet lever must be locked in the starting position (d) after clamping, otherwise the lashing strap can lose its entire clamping force.
– Do not place any loads on the lashing, if this may damage it.

3.3 Other applicable regulations and standards

– The following regulations and technical rules apply with:
VDI 2700 Sheet 2 –3 ff[1] „Securing loads on road vehicles“

- 1 Valid within Germany. Regulations may vary outside the scope of validity. Country-specific regulations must be observed.

Evers GmbH · Graf-Zeppelin-Str. 10 · 46149 Oberhausen · Telefon +49 208 99475-0 · Telefax +49 208 99475-31 · evers@eversgmbh.de · eversgmbh.de

– DIN EN 12195-2[1] „Load securing devices on road vehicles - Safety“

In addition, other special regulations that go beyond these may apply, e.g. for hazardous goods, or rail, sea and air transport.

3.4 Intended use

SpanSet lashing straps

– are lashing systems for bundling, down and diagonal lashing.
– may only be loaded up to the permissible tensile force stated on label **III**
– may only be used within certain temperature ranges: PES/PA -40°C up to +100°C, PP -40°C up to +80°C

3.5 Prohibited use

ⓘ Please find guide illustrations on the reverse of the envelope covering the following points:

1 Use as slings / lifting loads
2 Tying knots in the lashing
3 Twisting the lashing
4 Use of worn or damaged SpanSet lashing straps
5 Applying bending force to clamps and fasteners
6 Applying loads to fasteners at the hook tips
7 Applying or pulling over sharp edges (An edge is sharp if the radius „r“ of the edge is less than or equal to the thickness „d“ of the lashing.)
8 Use with acids and/or alkalis
9 Exceeding the permitted tension (LC)
10 Tensioning the ratchet with lever extension
11 The combination of different components from different manu–facturers is not permitted.

I I SpanSet lashing straps must be taken out of service in the following cases (cutting of the lashing, etc.):

– if label is missing, damaged or illegible

- 1 European standard. Instructions and regulations may vary outside the scope of validity.

Evers GmbH · Graf-Zeppelin-Str. 10 · 46149 Oberhausen · Telefon +49 208 99475-0 · Telefax +49 208 99475-31 · evers@eversgmbh.de · eversgmbh.de

– if the strap is cut or torn
– if knots form in the lashing
– if the seams are damaged
– if clamps and fasteners are damaged or deformed (see 5. Maintenance).

3.6 Residual risks

⚠ DANGER

Danger to life due to falling loads

– If SpanSet lashing straps are used in a prohibited way (see 3.4 Prohibited use), this may result in death or serious injury to persons involved due to falling loads.
– Only use SpanSet lashing straps as intended (see 3.3 Intended use).

3.7 Operator duties

The operator of SpanSet lashing straps is at least responsible for the following obligations:

1. Ensure that the safety rules and recommended actions contained in this manual are implemented **II**.
2. Establishing and implementing all measures prescribed under labour laws.
3. Documentation of the date of commissioning of lashing systems with a triangle and the date of the next test with a circle on the additional label **VI**.
4. Specifying the frequency of checks and maintenance.
5. Instructing/ training the target groups (see **1.2** Target groups).

4. Use of SpanSet lashing straps

4.1 General

Operator

Use only by authorised persons: qualified persons (see **1.2** Target group).

Loads

Check that the load is stable and secure. Unstable loads/ loads at risk of tipping must be secured by suitable lashings or positive locking (criteria for stability, see VDI 2700 Part 2).

Evers GmbH · Graf-Zeppelin-Str. 10 · 46149 Oberhausen · Telefon +49 208 99475-0 · Telefax +49 208 99475-31 · evers@versgmbh.de · eversgmbh.de

Method of securing loads

The best method for securing loads depends on the object being secured and the mounting options on the vehicle. The legislator demands that loads must be secured for „normal driving“ conditions, including emergency braking, strong evasive manoeuvres and poor road conditions!

4.2 Before the first use

Carry out a visual examination for damages.

4.3 Before every use

1. Have the operator's obligations according to **3.4** been complied with?
2. Visual inspection of the SpanSet lashing strap for damage and dirt:
   – Damaged SpanSet lashing straps must not be used.
   – SpanSet lashing straps that can no longer be repaired may not used and must be disposed of immediately.
   – Clean dirty SpanSet lashing straps.
3. Dry damp or wet SpanSet lashing straps in a ventilated room before use.
4. Check that the identification and dimensions of the SpanSet lashing strap are suitable for the intended use (see information on label III)
5. **Note:** The textile belt material can stain, so protect sensitive goods.

4.4 Use

4.4.1 Selection of suitable SpanSet lashing straps

In selection of belts you must consider on the following criteria:
The selected lashing strap must be strong enough for the intended use, possibly have a sufficient STF, have the appropriate fasteners and have the correct length with regard to the lashing method.

4.4.2 Lashing procedure

⚠ CAUTION Risk of injury during lashing

Evers GmbH · Graf-Zeppelin-Str. 10 · 46149 Oberhausen · Telefon +49 208 99475-0 · Telefax +49 208 99475-31 · evers@versgmbh.de · eversgmbh.de

Hand and arm injuries caused by crushing and compression when tightening lashing straps.

- Wear protective gloves and equipment.
- When loading and unloading, pay heed to low-hanging overhead cables.

Proceed as follows:

- For correct dimensioning of load securing, you must calculate the forces and then plan the use of the required lashing straps.
- two lashing straps must be used for lashing down and two pairs of lashing straps used for direct lashing of free-standing loads
- In case of sharp edges and rough surfaces, protect the lashing from damage with protective sleeves and edge guards.
- In case of inclined/ diagonal lashing, the lashing line must only be tensioned enough that the lashing device no longer sags.
- Only lashing systems labeled for lashing down with STF (standard tension force) may be used for friction lashing. With this system the maximum hand traction SHF (Standard Hand Force) indicated on the label may be applied only by hand. This is usually 25 daN with a belt width of 25 mm and 50 daN for all other belt widths.
- No mechanical aids such as rods or levers etc. may be used unless they are part of the clamping element.
- Roll up unnecessary strap, tie tightly and store in a dry place.
- Re-tighten lashing straps at regular intervals (especially shortly after starting the journey)!)
- Before opening ensure that the load is still safe, even without securing device, and does not pose a falling risk to unloading personnel. If nec. secure the load with slings before opening.
- The SpanSet ratchet lashing straps with the ABS system allow release of the initial tension in small stages when the belt tension is relieved by the anti-belt slip procedure.

4.4.3 Determining friction

Friction is particularly important when securing loads.

- Friction acts between the load and the cargo bed and depends on the material and surfaces.

Evers GmbH · Graf-Zeppelin-Str. 10 · 46149 Oberhausen · Telefon +49 208 99475-0 · Telefax +49 208 99475-31 · evers@versgmbh.de · eversgmbh.de

– By using certified anti-slip mats you can ensure a guaranteed coefficient of sliding friction.

4.4.4 Operation of the ratchet IV VII

Lashing device basic position/ starting position a

6. Open tensioning element 7 , pull the function slider 6
7. Put slotted shaft 5 in threading position for the loose end 1
8. Lashing strap starting position
9. Caution: With ErgoABS, place strap below guide bolt!

Applying the lashing

10. Place the lashing on the load.
11. Hang fasteners securely in the lashing points.

Length adjustment of the lashing b

12. Thread the loose end 1 into the opening 5 of the slotted shaft 2 and pull it through until the strap lies against the load.

Clamping the lashing device c

13. Tighten (move the ratchet lever back and forth) until the desired tension is achieved.
    – There must be at least 1.5 windings, but no more than 3, on the slotted shaft 2, for lashing straps with ABS-System min. 2 windings, but no more than 3.
    – Tighten diagonal lashings hand-tight.

Secure clamping element d

14. After lashing, pull the function slider 6.
15. Turn the ratchet lever 7 so far in the closed position until the slide 4 can engage in the safety recess (if available) or the ratchet lever is parallel to the console. The slider must be fixed in the toothed disc.
    – The ratchet is now closed.

Loosen e

16. Pull the function slider. 6

Evers GmbH · Graf-Zeppelin-Str. 10 · 46149 Oberhausen · Telefon +49 208 99475-0 · Telefax +49 208 99475-31 · evers@eversgmbh.de · eversgmbh.de

17. Swivel the ratchet lever **7** through 180° to the end stop to lock the slider in the last possible recess. **ATTENTION!** All the tension in the lashing is released at the same time!
18. Peculiarities of the ABS system: The SpanSet ratchet lashing straps with the ABS system allow release of the initial tension in small stages when the belt tension is relieved by the anti-belt slip procedure. Move the ratchet lever into the release range. Rocking the ratchet handle to and fro releases the initial tension gradually. Opening the ratchet handle into the maximum position makes the slotted shaft rotate freely, and the webbing can be easily pulled out.

4.5 TFI (Tension Force Indicator) V

SpanSet lashings straps for lashing down are optionally equipped with TFI. The TFI is offered in three versions and indicates the achieved tension force in each case. Due to the precise knowledge of the tension force, a targeted load securing is possible. The number of necessary lashing straps can thus be determined and the working time reduced. The TFI indicates the tension force achieved when the legs are completely compressed: Green: 500 daN **13**, Red: 750 daN **14**, Yellow: 1000 daN **15**.

5. Maintenance

– A visual inspection of the SpanSet lashing strap must be performed and documented at defined intervals.
– The inspection and documentation takes place annually.

5.1 Repairs

– Repairs may only be performed by the manufacturer or a person commissioned by the manufacturer.

5.2 Disposal

Dispose of SpanSet lashing straps via legally-compliant, proper and professional recycling methods at the end of their life cycle. The disposal must be performed in accordance with the relevant national legislati-

Evers GmbH · Graf-Zeppelin-Str. 10 · 46149 Oberhausen · Telefon +49 208 99475-0 · Telefax +49 208 99475-31 · evers@eversgmbh.de · eversgmbh.de

on of the country in which the SpanSet lashing strap is disposed of.

6. Storage

- Check SpanSet lashing straps for damage before storage. Do not store damaged lashings.
- Storage should not lead to damage of SpanSet lashing straps.
- Store SpanSet lashing straps in a clean, dry, well-ventilated environment away from heat sources and without contact to chemicals, fumes, corrosive surfaces, direct sunlight or other sources of ultraviolet radiation.

Evers GmbH · Graf-Zeppelin-Str. 10 · 46149 Oberhausen · Telefon +49 208 99475-0 · Telefax +49 208 99475-31 · evers@ versgmbh.de · eversgmbh.de